Accessory: GPSI-5000 Inputs

Typically when Input monitoring is ordered an Input Kit is also shipped containing a relay, relay harness, diode, wire, fuse holder and fuse.

Additional tools and/or parts that you may need include: razor knife, electrical tape, zip ties, wire crimper, wire stripper, wire cutter, 12V or 24V relay, relay harness, 20ga wire, ground screw, ring terminal, inline fuse, diode, and butt connectors.

- Input 1 Blue Wire [Pin 1] = Positive 12 VDC (+)
- Input 2 Blue with Orange Stripe Wire [Pin 2] = Negative (-) Input
- Input 3 Purple Wire [Pin 3] = Negative (-) Input
- Input 4 Gray Wire [Pin 4] = Negative (-) Input

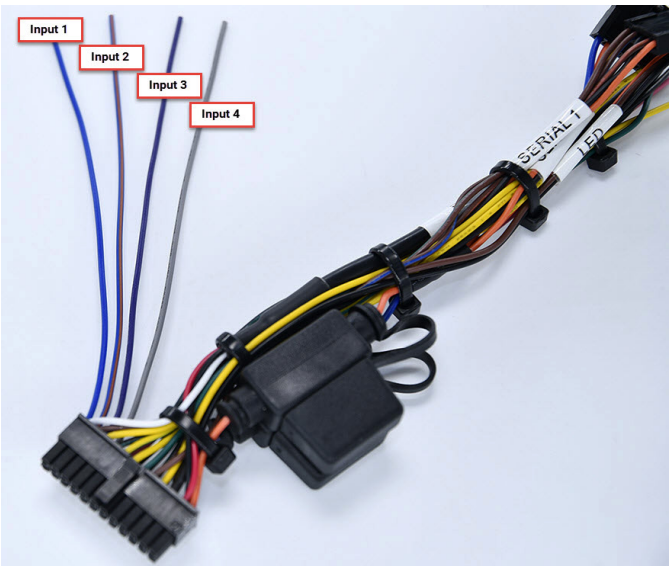

Note. Input 1 is a 12 VDC (+) input, used only in light-duty vehicles (e.g., F150-F550, Chevy 1500-3500, etc.). If you have a 24 VDC (+) system or a heavy-duty Class 6,7 or 8 vehicle, you must use one of the three negative (-) inputs (Input 2, 3 or 4). For negative inputs, in-cab switches typically sense a change in voltage from 0-12 VDC (+), so you may need to reverse the polarity by installing a relay. (See below)

Relay Installation

To convert a vehicle's positive 12-24 VDC (+) output to a Negative (-) ground output, follow the relay installation steps below.

To prepare for installation:

1. Locate the inline fuse holder and relay harness.
2. On the inline fuse holder, use a wire stripper to remove 1.5 in. (4 cm.) of insulation from one lead and 1 in. (2.5 cm.) from the other lead.
3. On the relay harness, remove 1 in. (2.5 cm.) of insulation from all wires except 87a (center wire).
4. Twist the exposed wires of each lead and use a wire cutter to trim excess wire.

To complete the installation:

Copyright ©2024 Nuvo Solutions

1. At the On/Off switch that you are going to monitor, use a digital multimeter to locate a wire that provides ~12 VDC (+) while the switch is in the ON position and 0 VDC (+) when the switch is in the OFF position.
2. Confirm the switch is the OFF position, then find a loose section of the switch wire and remove 1 in. (2.5 cm.) of insulation using a razor knife or wire strippers and gently poke something that is non-conductive between the exposed wires to create an even loop of the wires.
3. With the inline fuse holder in hand, poke the end with 1.5 in. (4 cm.) of exposed wire through the wire-exposed switch wire loop, squeeze the loop shut and wrap the inline fuse holder wire around the gap at least three (3) times, then fold the inline fuse holder back over the connection.
4. Secure the connection using electrical tape and two (2) zip ties;
    A. Generously wrap the connection in electrical tape and crossing over the insulation on both sides and place one (1) zip tie directly over the wire-to-wire connection.
    B. Create a stress loop created ~1 in. (2.5 cm.) away from the connection, then place the remaining zip tie on the stress loop.

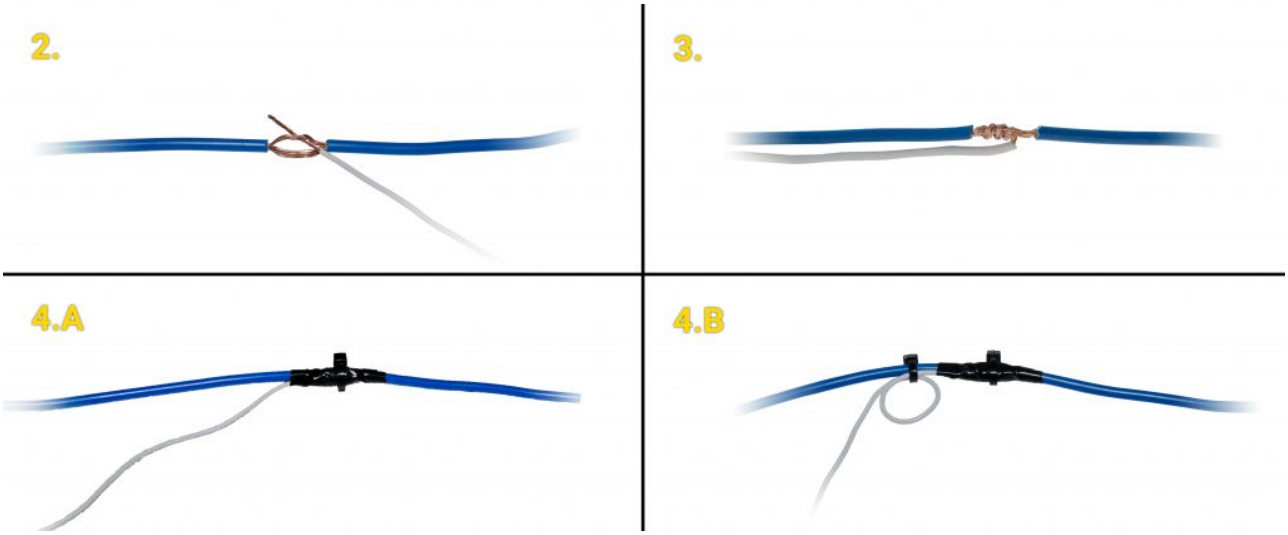

5. On the open lead of the inline fuse holder, use a butt connector to connect the inline fuse holder to the relay harness Pin 86.
6. Connect the relay harness Pin 30 and Pin 85 to a chassis ground using a ring terminal, star washer and butt connectors.
7. Connect Pin 87 to GPS device Input 2, 3 or 4 using a butt connector.
8. Record the input number and the type of switch being monitored on your Registration Card.

Copyright ©2024 Nuvo Solutions

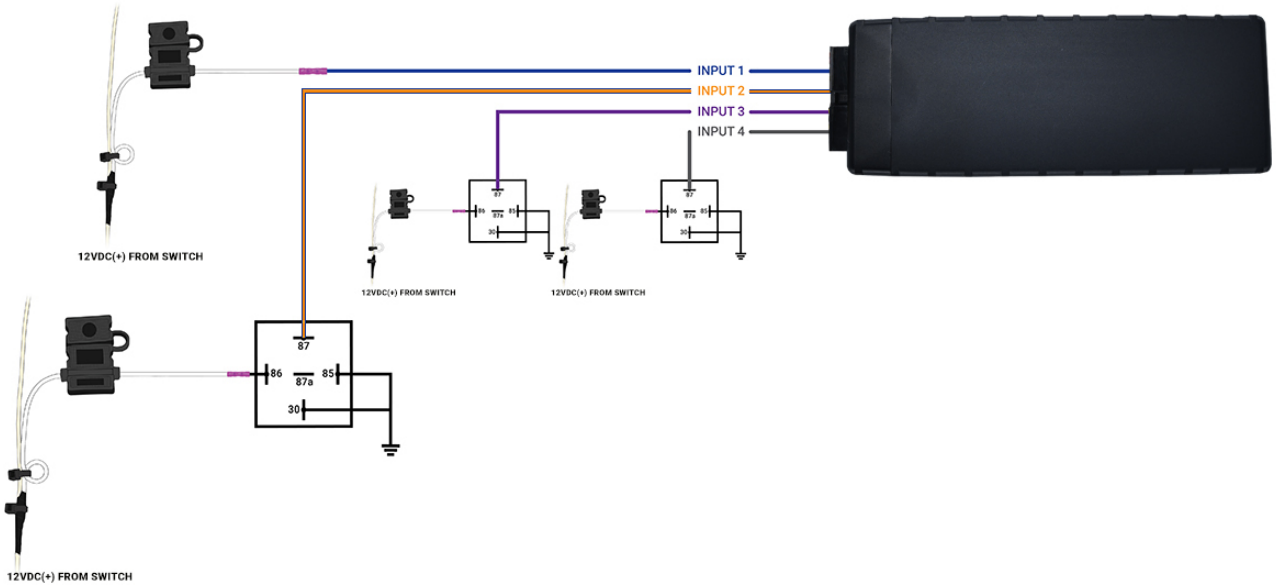
INPUT 1
INPUT 2
INPUT 3
INPUT 4
12VDC(+) FROM SWITCH
12VDC(+) FROM SWITCH
12VDC(+) FROM SWITCH
87
86
87a
85
30
12VDC(+) FROM SWITCH